SERVICE MANUAL

Form 5095T, 01-07
Supersedes Form 5095T, 05-06

DSP9600/9100 Balancer

HUNTER Engineering Company

Contents

Error Codes

1. **Spindle Encoder Timeout -** Timer overflowed during a spin. This should never happen if spindle is rotating.
2. **Excessive Time to Spin Up -** Too long to reach minimum RPM during spin up.
3. **Forward Rotation Not Detected -** Exceeded time limit to rotate spindle in the correct direction at the start of a spin.
4. **Motor Drive Fault Detected -** DC drive box signaled an error condition.
5. **Unexpected Reverse Rotation -** Spindle rotating in the wrong direction. This error may occur instead of “Loose” error if wing nut is loose or there is no wheel on the spindle.
6. **No Home Pulse Detected -** Home pulse never detected during a full revolution.
7. **No Expected Home Pulse -** Home pulse did not occur at expected spindle encoder count.
8. **Unexpected Home Pulse -** Home pulse detected at unexpected spindle encoder count. Multiple home pulses.
9. **Erratic Spindle Encoder -** Incorrect spindle encoder “A” and “B” phases.
10. **Left Force Transducer Temperature -** Left transducer temperature sensor not functioning.
11. **Right Force Transducer Temperature -** Right transducer temperature sensor not functioning.
12. **Balancer Cal Recall Error -** Error reading balancer calibration data from EEPROM.
13. **Balancer Cal Store Error -** Error storing balancer calibration data to EEPROM.
14. **Dataset® Arm Cal Recall Error -** Error reading Dataset® arm calibration data from EEPROM.
15. **Dataset® Arm Cal Store Error -** Error storing Dataset® arm calibration data to EEPROM.
16. **Setup Recall Error -** Error reading setup data from EEPROM.
17. **Setup Store Error -** Error storing setup data to EEPROM.
18. **Wheel Recall Error -** Error reading wheel data from EEPROM.
19. **Wheel Store Error -** Error storing wheel data to EEPROM.
20. **Multiple Recall Errors -** More than one error reading data from EEPROM at boot up. This always happens after first boot up with new DSP board. Need to save setup and all calibrations.
21. **Inflation Station Cal Store Error -** Error storing Inflation Station calibration to EEPROM.
22. **Inflation Station Cal Recall Error -** Error reading Inflation Station calibration data from EEPROM.
23. **PID Constant Recall Error -** Error reading motor control constants from EEPROM.
24. **PID Constant Store Error -** Error storing motor control constants to EEPROM.

Diagnostic Mode

Hold Right and Left Split Weight® keys during power up. Press “Next” key to begin showing diagnostic variables.

Diagnostic item number is shown on the “D” digits, and the value of that item is shown on the left and right weight digits. The number will be split across the two weight displays, and may contain a decimal point. The number is negative if the “D” units (mm and inches) are lit.

Balancer functions in normal balancer mode when diagnostic item is set to 0.

Turn diameter dimension knob, or press Next key to access the following data.

1. Spin Calibration Result, only valid if calibrated since power-up *(Refer to “Cal Results” section.)*
2. Inner Arm Calibration Result, only valid if calibrated since power-up *(Refer to “Cal Results” section.)*
3. Outer Arm Calibration Result, only valid if calibrated since power-up *(Refer to “Cal Results” section.)*
4. Mass Code from last spin up
5. Transducer L, static cal, magnitude
6. Transducer L, static cal, phase
7. Transducer L, cal spin 3, magnitude, only valid if calibrated since power-up
8. Transducer L, cal spin 3, phase, only valid if calibrated since power-up
9. Transducer R, static cal, magnitude
10. Transducer L, bare shaft, magnitude
11. Transducer R, bare shaft, magnitude
12. Transducer L, cal temperature
13. Transducer R, cal temperature
14. Transducer L, now
15. Transducer R, now
16. Transducer L, temperature
17. Transducer R, temperature
18. Transducer L, raw magnitude
19. Transducer R, raw magnitude
20. Couple Imbalance, magnitude / 100
21. Static Imbalance, magnitude
22. CenteringCheck® Couple Magnitude Diff / 100
23. CenteringCheck® Static Magnitude Diff
24. CenteringCheck® Couple Phase Diff
25. CenteringCheck® Static Phase Diff
26. Inner distance reading, now
27. Inner diameter reading, now
28. Outer distance reading, now
29. Outer diameter reading, now
30. Inner arm distance, home position
31. Inner arm diameter, home position
32. Spindle encoder count
33. Air Pressure, now
34. Inner Weight Phase, last spin
35. Outer Weight Phase, last spin
36. Switch Test (see “Switch Test” section)
37. Inner Weight Magnitude, last spin (more precision than normal display)
38. Outer Weight Magnitude, last spin (more precision than normal display)
39. Computed distance from spindle centerline to inner arm shaft centerline.
40. Angle from a line drawn between the shafts to the horizontal.
41. Outer Arm Distance, home position

Special Setup Items

Hold Right and Left Split Weight® keys during power up.

Press Cal/Setup key to enter Setup. Three new items will be available in addition to the regular setup items.

Weight rounding value (0.25, 0.01, 0.05 oz).

Weight blind value (0.29, 0.58, 0, 0.15 oz).

Language (Domestic, English Int., German, Spanish LA, Spanish).

Resetting All Setup Items to Default

To automatically reset all setup items to factory defaults hold down “Setup/Cal” key during power up.

Settings will be stored in EEPROM memory and will remain defaulted when power is turned off.

Motor Test Mode

Hold Static/Dynamic key and Ounces/Grams key during power up.

Motor duty cycle is shown on “W” digits (50% at startup). Lower the hood and press Start key. The motor should remain stopped or begin to slowly rotate in either direction.

Use the “W” dimension knob to change the duty cycle. Duty cycles greater than 50% cause the motor to spin clockwise (direction of balance spin). Less than 50% duty cycle spins the motor counter-clockwise.

Balancer will not function as a normal balancer while in motor test mode. Turn power off and back on to exit this test.

Auto-Spin Mode

Hold down Left Split Weight® and Static/Dynamic key at power up.

Continuously repeats balance spins, with an adjustable delay between each spin.

Turn “W” dimension knob to adjust time between spins (in seconds).

Spin count is shown in “A” digits.

Balancer will not function as a normal balancer while in motor test mode. Turn power off and back on to exit this test.

Motor PID Setting Mode

Hold down Right Split Weight® and Stop key at power up.

Press the CenteringCheck® key (up to 4 times) to select the type of spin.

1. Wheel with tire balance spin (Note: Some values are multipliers, not actual PID values).
2. Quick-Thread®
3. Bare spindle.
4. Wheel with tire servo.

For adjusting PID constants in the field, Proportional term (P) is shown in “A” digits, Integral term (I) is shown in “W” digits, and Derivative term (D) is shown in “D” digits.

Use the appropriate knobs to adjust the constants for one or more spin types.

Press the CenteringCheck® key once more (“-5-“ shown in left digits) to display the balance spin target RPM. Use the “D” knob to adjust if necessary.

To temporarily store the new PID constants and RPM (until power is turned off), press the CenteringCheck® key while the target RPM is displayed.

To permanently store the new PID constants and RPM, press the Enter key while the target RPM is displayed. Turn power off and back on to exit this test.

Factory settings for PID and RPM:

“-1-“	75, 70, 0
”-2-“	20, 8, 15
”-3-“	10, 15, 0
”-4-“	125, 140, 61
”-5-“	300

Switch Test

Hold Right and Left Split Weight® keys during power up. Press “Next” key to begin showing diagnostic variables.

Dial the “D” knob to diagnostic item number 36. Zero will be displayed on the right weight digits.

Press all keys and close all switches. Each switch closure should be followed by a beep indicating that the switch is functioning.

Dial the “D” knob CW or CCW to exit the switch test.

Display Test

Hold Stop key and Oz/g key during power up.

All of the LEDs will light and stay lit until the spindle is rotated or the hood switches change state. Balancer will not exit the test at the press of a key, like the normal merchandising display.

Resetting Setup Items to Default

To automatically reset all setup items to factory defaults hold down “Setup/Cal” key during power up.

Settings will be stored in EEPROM memory and will remain defaulted when power is turned off.

Configuration Jumpers

Place jumper on S4 if no Dataset® arms are installed.

Place jumper on S3 (not S4) if inner Dataset® arm installed, but not outer.

No jumpers on S4, S3 means both Dataset® arms are installed.

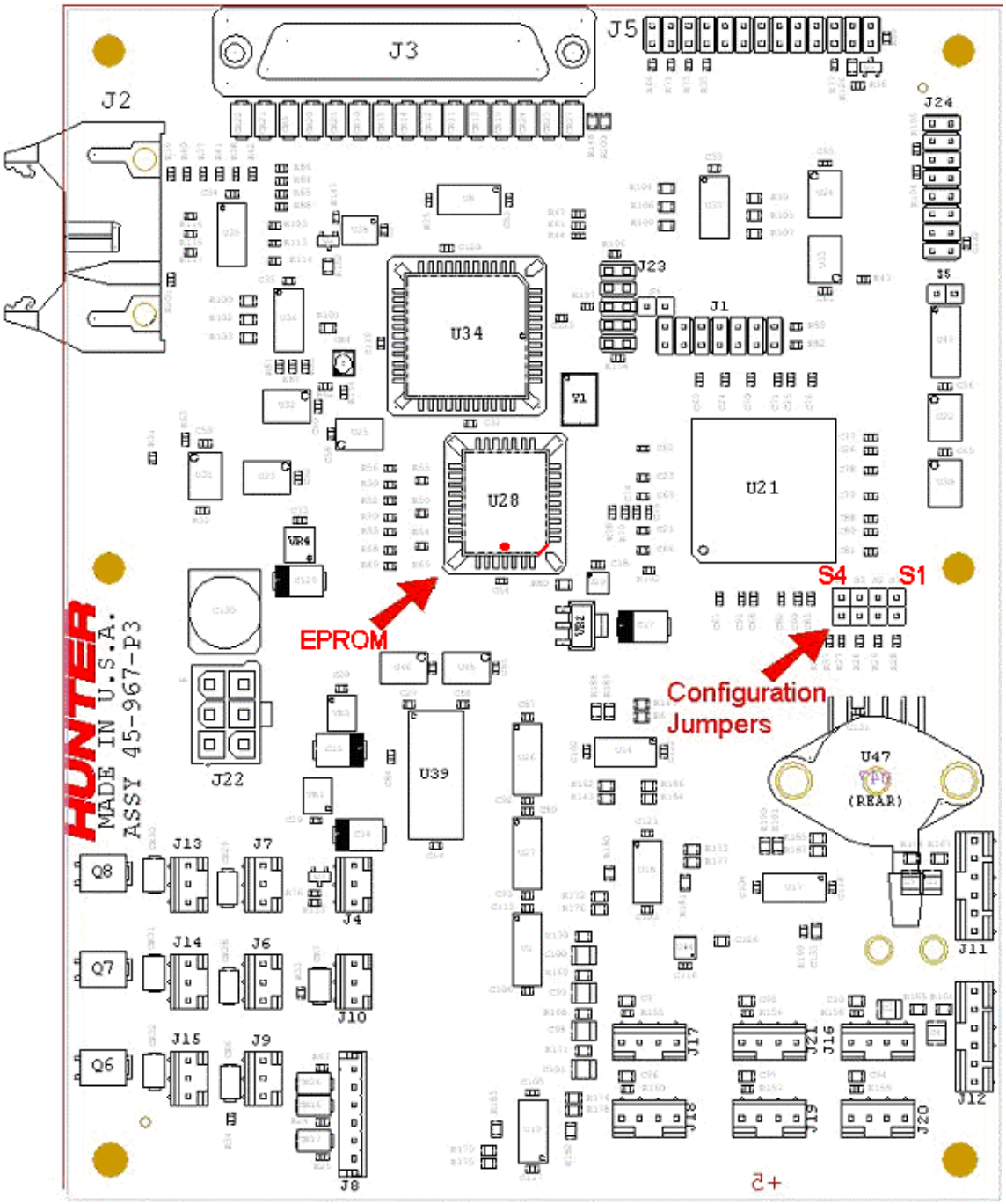

Identifying Balancer Model and Software Version

Press and hold “Enter” key while turning on power.

The left weight digits display the balancer model as determined by the configuration jumpers.

“910” Indicates a DSP9100 (No Dataset® arms).

“96d” Indicates a DSP9600-D (Inner Dataset® arm only).

“6dd” Indicates a DSP9600-DD (both Dataset® arms installed).

The software version number is shown on the right weight digits.

Changing Software (Replacing EPROM)

Must use a chip puller tool, 221-548-2 (or equivalent), to avoid damaging the socket.

Place the chip puller hooks in the slots at the upper right and lower left corners of the socket, squeeze lightly and pull straight out.

Place new EPROM in the same orientation. Letters on the chip will be upside down and the notched corner of the chip will be at the bottom right.

Lay the new chip FLAT AGAINST ALL FOUR SIDES OF THE SOCKET **BEFORE** pushing straight down to seat the chip.

Hold the “Enter” key and turn on the power. Check the software revision number displayed in the right weight digits.

Skip Inner Arm Calibration and Calibrate Outer Arm

Boot up normally. Outer arm must be installed.

Press Setup/Cal key to select arms calibration, then hold the Stop key and press Enter to begin calibration.

Inner arm calibration will be skipped. Follow normal outer arm calibration steps.

Calibration Procedures

"Calibration" can be selected by pressing the "Setup/Cal" button.

Store the calibration weight in the threaded hole on the control panel support.

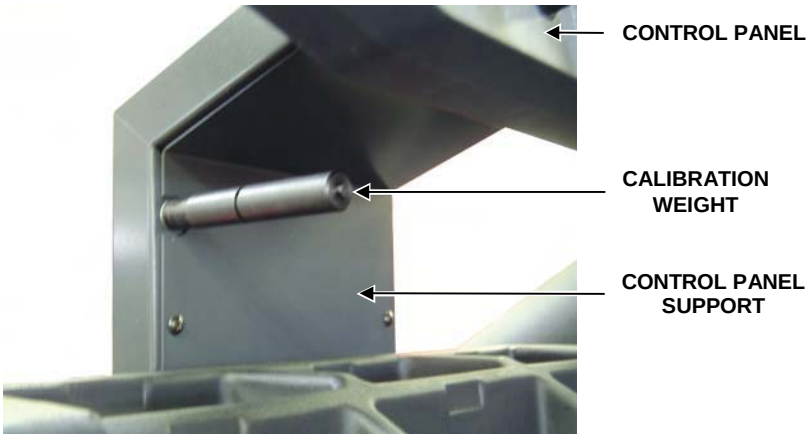

Dataset® arm and load roller calibrations require the optional calibration tool, 221-602-1.

Quick Cal Check

Begin with balancer "OFF," then turn "ON."

Attach cal weight to either side of one of the two holes in the hub faceplate.

Press the "Start" button to spin. Display shows "CAL RDY" or "CAL ERR."

Press the "Next" button to show weights.

Balancer Calibration

Press the "Setup/Cal" button once. "CAL" is displayed.

Press the "Enter" button to begin calibration.

Do not install cal weight. Lower the hood and press the “Start” button to spin (if "Hood Autostart" is disabled).

Install cal weight on left side of hub faceplate in either hole, align cal weight at TDC, and press the “Enter” button. Spin.

Move cal weight to right side of hub faceplate in opposite hole.

Spin, display reads “CAL RDY.”

Inner Dataset® Arm (Calibration Tool, 221-672-1, Required)

Press “Setup/Cal” button once. “CAL” is displayed.

Press “Next” button. “CAL” is displayed at inner Dataset® arm location, and “---]” is displayed if equipped with outer Dataset® arm.

Press “Enter” to begin calibration. The step numbers are shown on the display, starting with “Stp -1-.” Each step is described below.

NOTE:	Turn the distance dimension knob to backup to a previous cal step.

Verify that the inner arm is not extended, is in the “home” position at the top of the weight tray, and is not moving. Tap the foot pedal once or press “Enter Cal Step.”

Place the calibration tool on the shaft, using the spindle shaft slot located closest to the middle of the calibration tool, as shown. Rotate the calibration tool slowly by hand, clockwise until there is a beep, and the step number changes to “-3-.”

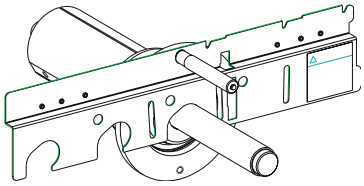

Position the calibration tool parallel to the floor. Tap the foot pedal once or press "Enter.”

Place the inner Dataset® arm at upward position “1” as shown. Tap the foot pedal once or press "Enter.”

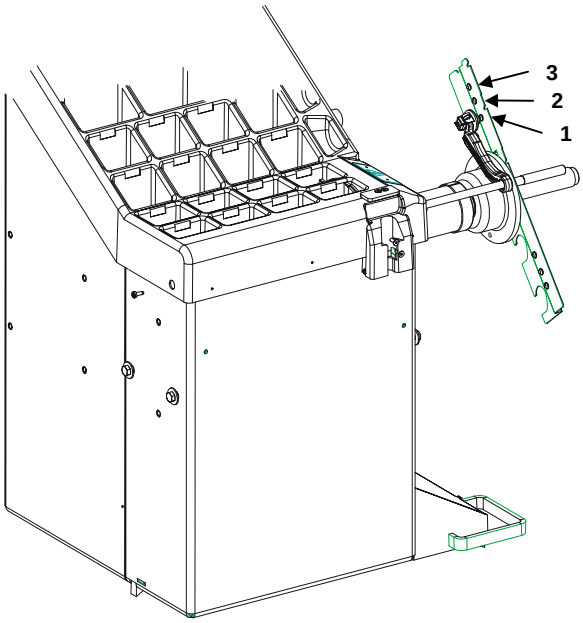

Move the inner Dataset® arm to upward position “2.” Tap the foot pedal once or press “Enter.”

Move the inner Dataset® arm to upward position “3.” Tap the foot pedal once or press “Enter.”

Place the inner Dataset® arm at downward position “4.” Tap the foot pedal once or press “Enter.”

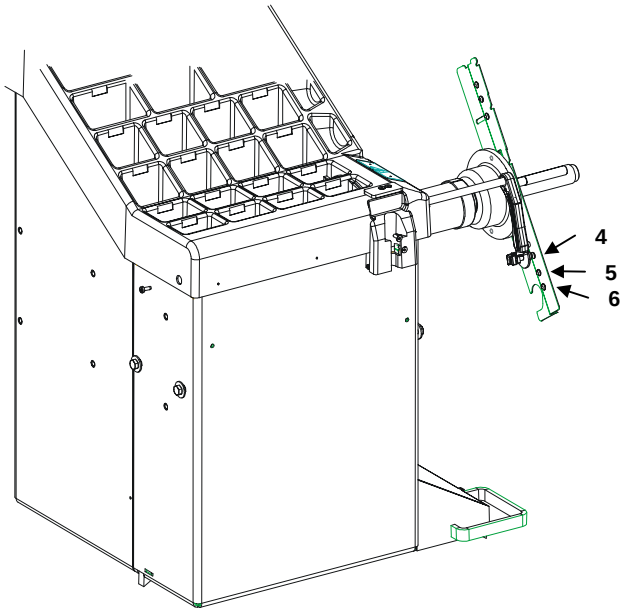

Move the inner Dataset® arm to downward position “5.” Tap the foot pedal once or press “Enter.”

Move the inner Dataset® arm to downward position “6.” Tap the foot pedal once or press “Enter.”

Return the inner Dataset® arm to the non-extended (short) position.

Position the calibration tool parallel to the spindle shaft on the hub using the hub mounting slot as shown.

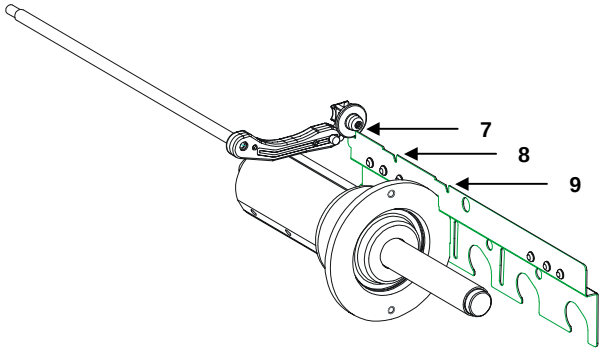

Place the inner Dataset® arm at the position “7.” Tap the foot pedal once or press "Enter.”

Move the inner Dataset® arm to position “8.” Tap the foot pedal once or press “Enter.”

Move the inner Dataset® arm to position “9.” Tap the foot pedal once or press “Enter.”

If optional outer Dataset® arm is not installed, calibration is complete. If optional outer Dataset® arm is installed, *refer to “Outer Dataset® Arm,” page 11.*

Outer Dataset® Arm (Calibration Tool, 221-672-1, Required)

With the hood in the raised position, verify that the outer arm is in the “home” position and that the arm and hood are not moving. Tap the foot pedal once or press "Enter.”

Place the calibration tool on the hub using the hub mounting slot as shown.

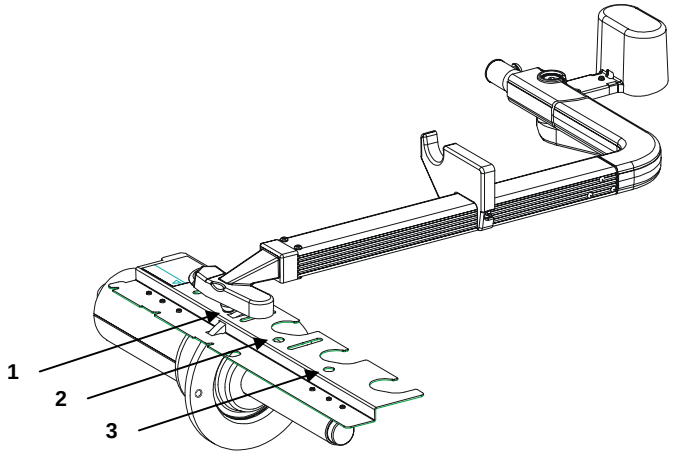

Place the outer Dataset® arm ball in hole position “1.” Tap the foot pedal once or press “Enter.”

Place the outer Dataset® arm ball in hole position “2.” Tap the foot pedal once or press “Enter.”

Place the outer Dataset® arm ball in hole position “3.” Tap the foot pedal once or press “Enter.”

Dataset® arm calibration is complete. “RDY” is displayed near the inner arm graphic to indicate that the inner Dataset® calibration passed. “RDY --]” is displayed on the weight digits to indicate that the outer Dataset® calibration passed.

Enabling/Disabling Inflation Station and Changing Units

Press the “Setup/Cal” button twice. “Setup” is shown on the left and right digits. Press the “Enter” button to begin setup.

Press “Enter” until “INF” is shown on the left weight digits.

Press the “Next” button to select pressure units (kPa, PSI, or Bar) . “OFF” in the right weight digits indicates that Inflation Station is disabled.

Press “Enter” to store selection, then press “Setup/Cal” button to exit setup.

Inflation Station Calibration

Verify that Inflation Station is enabled (see previous section).

Press the “Setup/Cal” button once. “Cal” is displayed.

Press the “Next” button twice. “Inf Sta” is displayed on left and right weights digits.

Press “Enter” to begin calibration. “-0- PSI” is displayed (Or other units, *refer to “Enabling/Disabling Inflation Station and Changing Units,” page 11).*

Store the zero pressure reading by pressing “Enter” with the inflation hose in the home storage position.

“OPT Ref” is displayed. This is an optional step to calibrate to a reference gauge.

Measure a tire’s pressure using the pressure gauge that you wish to use as a reference. Enter the measured pressure by turning the left control knob (distance dimension).

Attach the Inflation Station hose to the tire that was measured in the previous step, and press “Enter.” The difference between the measured pressure and the dialed in number must be within 7 PSI or the calibration will fail.

NOTE:	If you wish to skip the optional reference gauge calibration, leave the dialed in pressure at zero, keep the inflation hose in the home storage position, and press “Enter.”

Display reads “Rdy Inf” if calibration passed.

Press the “Setup/Cal” button to exit calibration mode.

Calibration Results

The DSP9600/DSP9100 uses GSP9700 style calibration status bits. “0” bit indicates a failure. “1” bit indicates a pass.

Six bits (counting from the right) are displayed on the left and right weight digits.

Press “Next” key to advance.

The DSP9600 does not have enough digits to display the entire cal result for the inner Dataset® arm cal and spin cal.

The first group of 6 bits (counting from the right) is displayed on the left and right weight digits first. The diagnostic variable number will be “1A” or “2A” for the first 6 bits.

Press “Next” key to show the second group of the cal result bits. The diagnostic variable number will be “1b” or “2b” for the next 6 bits.

Turn the “D” knob to advance to next diagnostic variable.

SECOND GROUP OF DIAGNOSTIC BITS **FIRST GROUP OF DIAGNOSTIC BITS**

12 11 10 9 8 7 **6 5 4 3 2 1**

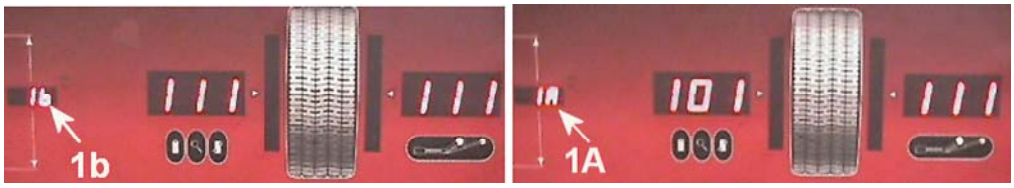

Example above shows a Spin cal bit 5 failure.

Status bits for the Balancer Spin Calibration

If calibration passed, the bits will be “111111 111111”.

The bits are described below.

Bit 1 - This bit verifies that spin 1 (bare shaft) left force transducer readings are within tolerance. If this bit fails, the cal weight may have been installed before spin 1.

Bit 2 - This bit verifies that spin 1 (bare shaft) right force transducer readings are within tolerance. If this bit fails, the cal weight may have been installed before spin 1.

Bit 3 - This bit verifies that spin 2 left force transducer readings are within tolerance. If this bit fails, the cal weight may not have been installed, or was installed on the wrong side.

Bit 4 - This bit verifies that spin 2 right force transducer readings are within tolerance. If this bit fails, the cal weight may not have been installed, or was installed on the wrong side.

Bit 5 - This bit verifies that the cal weight was moved to the opposite side between spins 2 and 3.

Bit 6 - This bit verifies that the cal weight was in the same hole for spins 2 and 3.

NOTE:	Press “Next” to show remaining bits (1b). The first bit on the right will be bit 7.

Bit 7 - This bit verifies that the left force transducer temperature reading was within tolerance. If this bit fails, the transducer or DSP control board is defective.

Bit 8 - This bit verifies that the right force transducer temperature reading was within tolerance. If this bit fails, the transducer or DSP control board is defective.

Bit 9 - This bit verifies that the “4x” gain stage for the left force transducer is operating properly. If this bit fails, the transducer or DSP control board is defective.

Bit 10 - This bit verifies that the “4x” gain stage for the right force transducer is operating properly. If this bit fails, the transducer or DSP control board is defective.

Bit 11 - This bit verifies that the “2x” gain stage for the left force transducer is operating properly. If this bit fails, the transducer or DSP control board is defective.

Bit 12- This bit verifies that the “2x” gain stage for the right force transducer is operating properly. If this bit fails, the transducer or DSP control board is defective.

NOTE:	Turn the “D” knob to advance to next diagnostic variable.

Status bits for the Inner Dataset® Arm

Status bits for the inner Dataset® arm have the same meaning as the bits shown on a GSP9700.

Unused bits will be “0”. For example, if calibration passed, the bits will be “000011 111111”.

The bits are described below.

Bit 1 - This bit checks the readings in radial steps 2 and 3 of the inner Dataset® calibration. If this bit fails, there is something wrong with the inner Dataset® diameter sensor circuit or the correct calibration sequence was not followed.

Bit 2 - This bit checks the readings in radial steps 1 and 2 of the inner Dataset® calibration. If this bit fails, there is something wrong with the inner Dataset® diameter sensor circuit or the correct calibration sequence was not followed.

Bit 3 - This bit checks the readings in radial steps 1 and the initial storing of the home settings of the inner Dataset® calibration. If this bit fails, there is something wrong with the inner Dataset® diameter sensor circuit or the correct calibration sequence was not followed.

Bit 4 - This bit checks the readings in radial steps 5 and 6 of the inner Dataset® calibration. If this bit fails, there is something wrong with the inner Dataset® diameter sensor circuit or the correct calibration sequence was not followed.

Bit 5 - This bit checks the readings in radial steps 4 and 5 of the inner Dataset® calibration. If this bit fails, there is something wrong with the inner Dataset® diameter sensor circuit or the correct calibration sequence was not followed.

Bit 6 - This bit checks the readings in lateral step 1 and the initial storing of the home settings of the inner Dataset® calibration. If this bit fails, there is something wrong with the inner Dataset® distance sensor circuit or the correct calibration sequence was not followed.

NOTE:	Press “Next” to show remaining bits (2b). The first bit on the right will be bit 7.

Bit 7 - This bit checks the readings in lateral step 1 and 2 of the inner Dataset® calibration. If this bit fails, there is something wrong with the inner Dataset® distance sensor circuit or the correct calibration sequence was not followed.

Bit 8 - This bit checks the readings in lateral step 2 and 3 of the inner Dataset® calibration. If this bit fails, there is something wrong with the inner Dataset® distance sensor circuit or the correct calibration sequence was not followed.

NOTE:	Turn the “D” knob to advance to next diagnostic variable.

Status bits for the Outer Dataset® Arm

Unused bits will be “0”. For example, if calibration passed, the bits will be “000111”.

The bits are described below.

Bit 1 - This bit checks the readings in lateral steps 1 and 2 of the outer Dataset® calibration. If this bit fails, there is something wrong with the outer Dataset® distance sensor circuit or the correct calibration sequence was not followed.

Bit 2 - This bit checks the readings in lateral steps 2 and 3 of the outer Dataset® calibration. If this bit fails, there is something wrong with the outer Dataset® distance sensor circuit sensor circuit or the correct calibration sequence was not followed.

Bit 3 - This bit checks the readings in lateral step 1 and the initial storing of the home settings of the outer Dataset® calibration. If this bit fails, there is something wrong with the outer Dataset® distance sensor circuit or the correct calibration sequence was not followed.